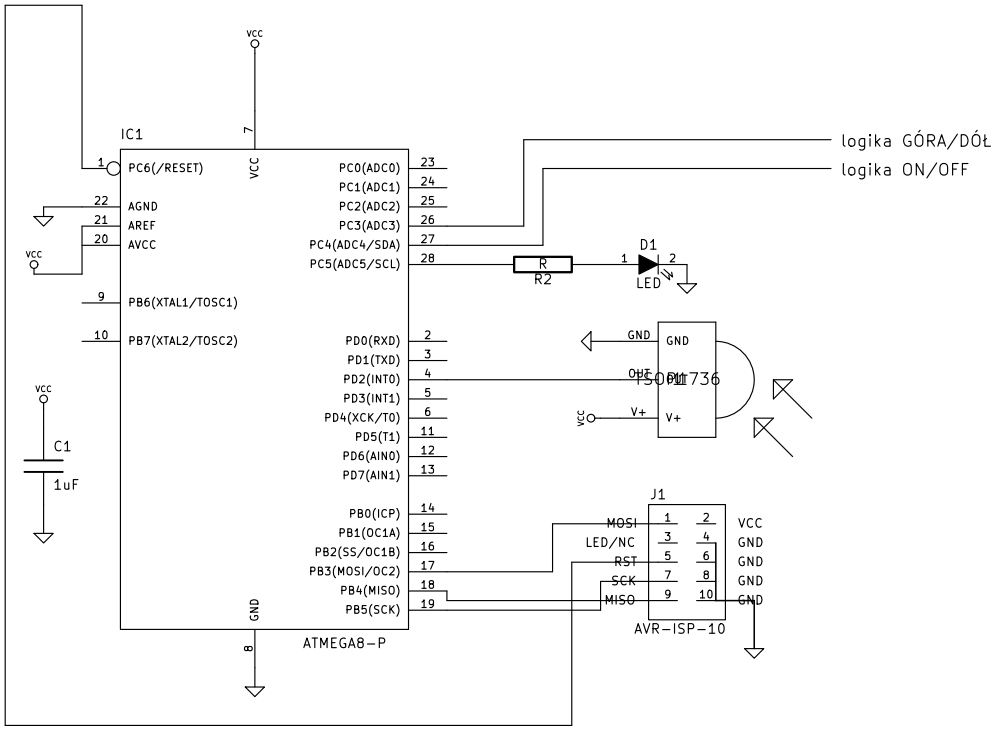

File: rolety.sch		
Sheet: /		
Title:		
Size: A4	**Date: 17 aug 2010**	**Rev:**
KiCad E.D.A.		Id: 1/1